Diritti riservati All rights reserved

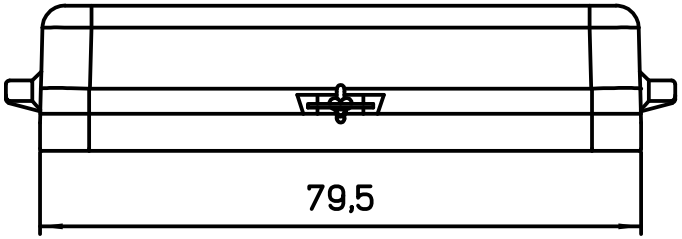

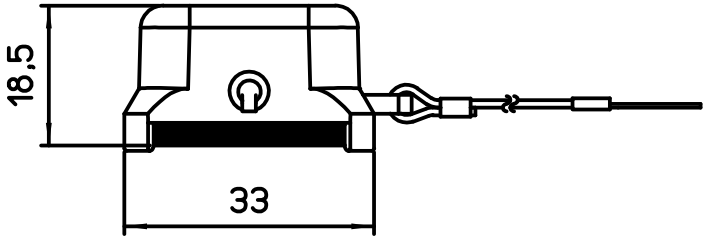

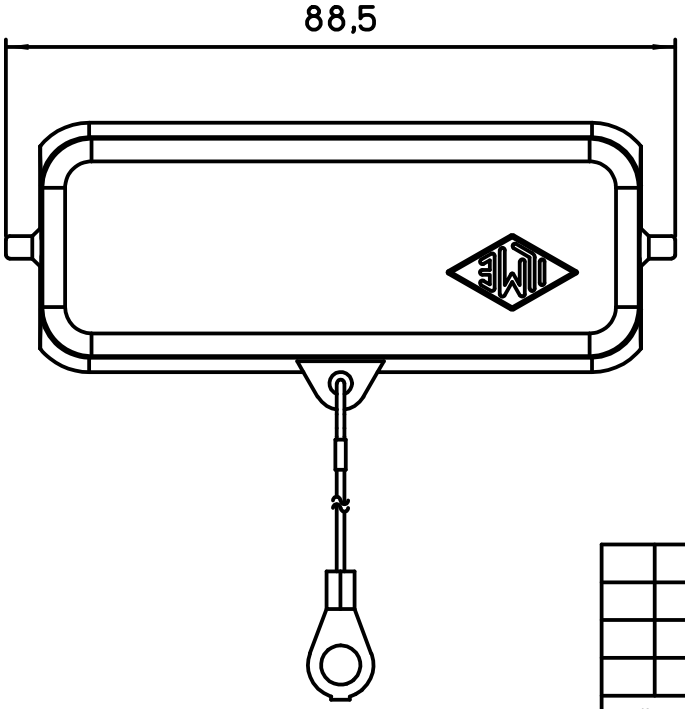

dimensions in mm	CZC 25 L Cover with pegs and gasket	Scale 1:1
Date 01/07/19		
Sign. D.Cominelli		